Stock Code: **50079LEDDLP-MBL/OPL**

Collection: Conga

PRODUCT INFORMATION

Base: 50079
Parent: 50079LEDDLP
Mounting Type: Ceiling
UPC: 641594246452
Finish: Matte Black
Diffuser: Opal

PRODUCT MEASUREMENTS

FIXTURE**
- Length:
- Width:
- Diameter 12"
- Height: 4.5"
- Extension:
- Overall Height:

BACKPLATE / CANOPY**
- Length
- Width:
- Diameter:
- Height:

TECHNICAL SPECIFICATIONS

SPECIFICATIONS

Frame Material: Metal
Diffuser Material: Glass
Lamping Type: E-26 (Replaceable LED
Jbox: Standard
Lamping Base: E-26
Lamp Wattage: 10 W
Lamp Quantity: 1
Total Wattage: 10 W
Voltage: 120v
Lamps Included: Yes

QUALIFICATIONS

Location Rating Damp
Certification: UL (US/Canada) Listed
ADA Compliant: No
Energy Star: No
JA8 Compliant: Yes
Emergency Lighting: No
Marine Grade Finish: No
Warranty**: 1 Year

PHOTOMETRICS

Dimmable: Yes
Nominal Lumens: 800 Lm
CRI: 90
Delivered Lumens: N/A
CCT: 3000K
Recommended Dimmers:
(MLV)COOPER Aspire 9530SW; (TRIAC)LEGRAND Titan CD703-PW; (ELV)LUTRON Skylark SELV-300P

ADDITIONAL NOTES

Custom Finish 5 Piece Minimum Order Quantity

Project Name: _____
Location: _____
Type: _____
Quantity: _____
Notes:

LINE DRAWING

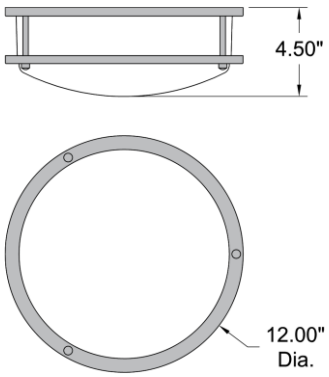

IES FILE

In addition to Access Lighting's purchase and warranty terms and conditions, by signing below or placing an order, you agree that you are authorized to bind the entity placing any order and acknowledge the following: All of sizes and measurements are approximate and all images are for illustrative purposes only. In the event of an inconsistency, the "Product Measurements" section controls. There also may be slight differences in the colors and designs compared to the displayed and printed images.

Signature: _____

Print Name _____ Date: _____

Toll Free 800-828-5483 www.AccessLighting.com
301 Piedmont Grove Park, Suite A, Greenville, SC 29611

** NOTE: All measurements are rounded up to the 1/4 inch. There is no warranty on any replaceable bulbs, even if included with the fixture.

Copyright Access Lighting Corp. All information is subject to change without notice.